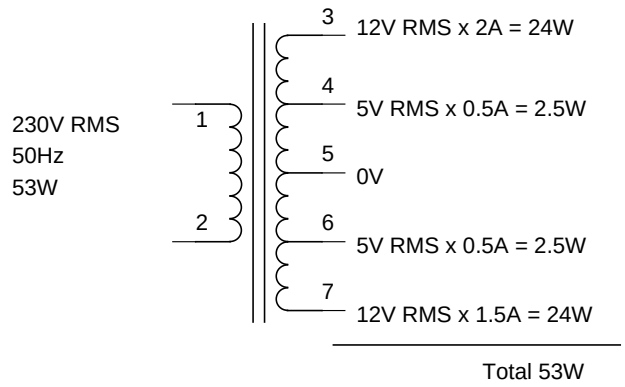

Hacker's Power Supply

TITLE Transformer specification

FILE:	Licensed under GPL	REVISION:	20041028
PAGE 1 OF 1		DRAWN BY:	Karel 'Clock' Kulhavy